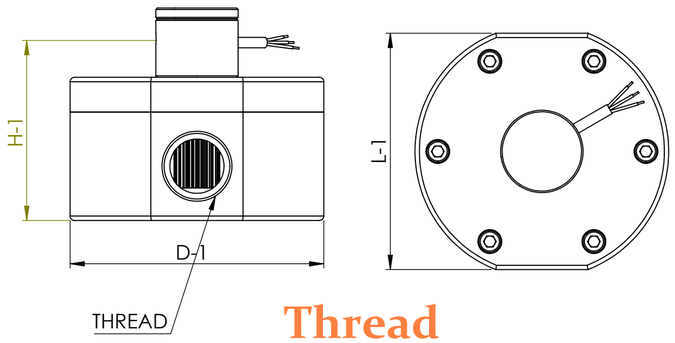

Thread

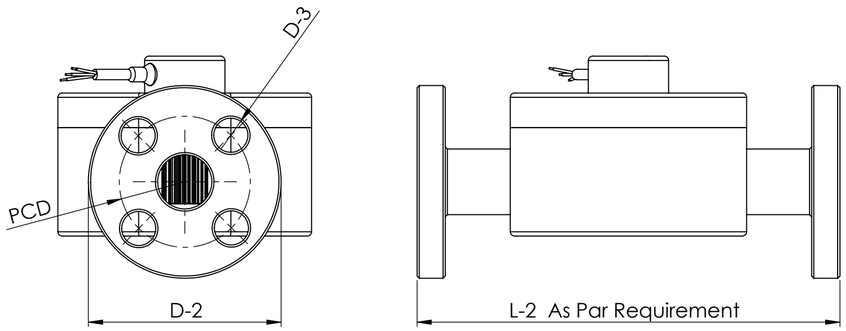

Flange

Part no.	H-1	D-1	L-1	Thread	CLASS150 FLANGE	D2	HOLE	PCD
UF-DGFM-003	57	63	59	1/4" BSP	1/2"	88.9	15.74X4	60.45
UG-DGFM-006	57	63	59	1/4" BSP	1/2"	88.9	15.74X4	60.45
UG-DGFM-009	60	67	61	3/8" BSP	1/2"	88.9	15.74X4	60.45
UG-DGFM-012	66	86	81	1/2" BSP	1/2"	88.9	15.74X4	60.45
UG-DGFM-020	73	97	91	3/4" BSP	3/4"	98.55	15.74X4	69.85
UG-DGFM-025	83	117	109	1" BSP	1"	107.95	15.74X4	79.24
UG-DGFM-040	103	195	183	1-1/2" BSP	1-1/2"	127.0	15.74X4	98.55
UG-DGFM-050	128	195	183	2" BSP	2"	152.4	19.05X4	120.65
UG-DGFM-080	159	240	220	3" BSP	3"	190.5	19.05X4	152.4

UNLESS OTHERWISE SPECIFIED:
DIMENSIONS ARE IN MILLIMETERS
SURFACE FINISH:
TOLERANCES:
LINEAR:
ANGULAR:

FINISH:

DEBURR AND BREAK SHARP EDGES

DO NOT SCALE DRAWING

REVISION

	NAME	SIGNATURE	DATE
DRAWN			
CHK'D			
APPV'D			
MFG			
Q.A			

MATERIAL:

WEIGHT:

TITLE:

DWG NO. dimention

A2

SCALE:1:1

SHEET 1 OF 1